Dimension
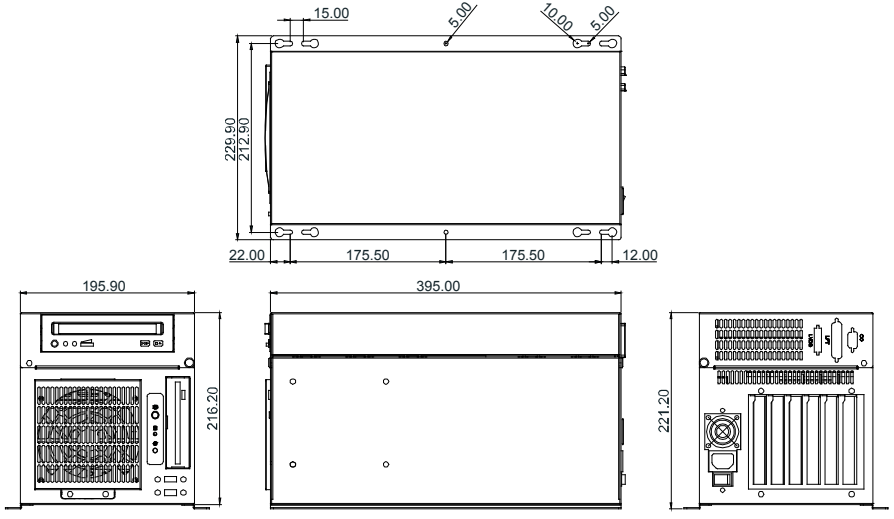
Unit: mm